ENERGIZER CR2025
Ultimate Lithium

Lithium Coin



Industry Standard Dimensions

mm (inches)

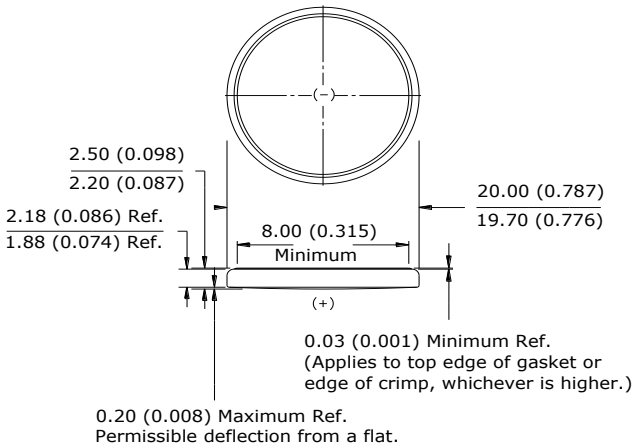

Simulated Application test

Typical Performance at 21°C (70°F)

Schedule:	Typical Drains: at 2.9V (mA)	Load (ohms)	Cutoff 2.0V (hours)
Continuous	0.19	15,000	890

Typical Discharge Characteristics

Load: 15K ohms - Continuous
Typical Drain @ 2.9V: 0.193 mA

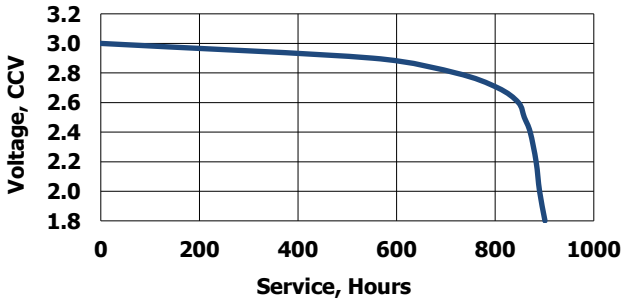

General Information

Classification:	"Lithium Coin"
Chemical System:	Lithium / Manganese Dioxide (Li/MnO_2)
Designation:	ANSI / NEDA-5003LC, IEC-CR2025
Nominal Voltage:	3.0 Volts
Typical Capacity:	170 mAh (to 2.0 volts) (Rated at 15K ohms at 21°C)
Typical Weight:	2.6 grams (0.08 oz.)
Typical Volume:	0.8 cubic centimeters (0.05 cubic inch)
Max Rev Charge:	1 microampere
Energy Density:	176 milliwatt hr/g, 616 milliwatt hr/cc
Typical Li Content:	0.078 grams (0.0028 oz.)
Operating Temp:	-30C to 60C
Self Discharge:	~1% / year

Safety: ⚠ WARNING

(1) KEEP OUT OF REACH OF CHILDREN. Swallowing may lead to serious injury or death in as little as 2 hours due to chemical burns and potential perforation of the esophagus. **Immediately see doctor; have doctor phone (800) 498-8666.**

(2) Battery compartment design. To prevent children from removing batteries, battery compartments should be designed with one of the following methods: a) a tool such as screwdriver or coin is required to open battery compartment or b) the battery compartment door/cover requires the application of a minimum of two independent and simultaneous movements of the securing mechanism to open by hand. Screws should remain captive with the battery door or cover.

Internal Resistance Characteristics

Pulse Test at 21°C (70°F)

Bkgnd Drain: Continuous
15K ohms
0.19 mA @2.9V

Pulse Drain: 2 seconds X 12 times/day
400 ohms
6.8 mA @2.7V

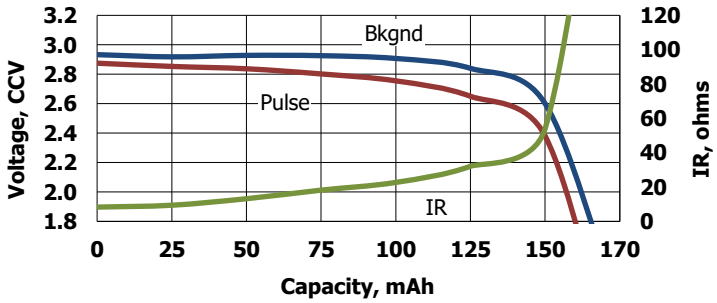

Important Notice

This datasheet contains typical information specific to products manufactured at the time of its publication.
Contents herein do not constitute a warranty and are for reference only.